ENCORE
ITALIA

2026/01

ENCORE
ITALIA

2026/01

Designed for those who strive for luxury and excellence.

Our deep-rooted love for our craft, our meticulous attention to every detail, and our continual innovation are the pillars upon which our furniture stands, enabling us to give birth to iconic pieces of unmatched prestige.

Encore Italia's pursuit of a distinctive stylistic expression for an exclusive space merge in the brand's new design concept, expressed in atmospheres rich in fascinating details and in furniture pieces that imbue any space with unparalleled allure.

From the artisan values of Made in Italy stem this collection with a vast range of proposals enhanced by captivating combinations, a blend of tradition and innovation, to dress the home with sophisticated elegance.

Index

	Dining	6
NEW!	Dining Tholos	8
NEW!	Dining Torii	24
	Dining Horus	36
NEW!	Dining Dobos	46
	Living	56
NEW!	Living Dobos & Matisse	58
NEW!	Living Torii	68
	Living Michelia	74
	Living Stone	80
NEW!	Living Nest	86
	Living Eclipse	94
	Bedroom	98
	Bedroom Concept 01	100
	Bedroom Echo	106
	Bedroom Sophisma	112
NEW!	Bedroom Cinnamon	122
	Bedroom Nuvola	136
	Bedroom Erythea	146
	Moodboard	154
	Products	158
	Tables & Console	160
	Sideboard & Cupboards	178
NEW!	Chairs	186
NEW!	Coffee Tables & Benches	202
	Sofas & Armchairs	212
	Beds	230
	Nightstands & Dressers	240
	Accessories	252
	Datasheet	256
	Gallery	272 / DLVII

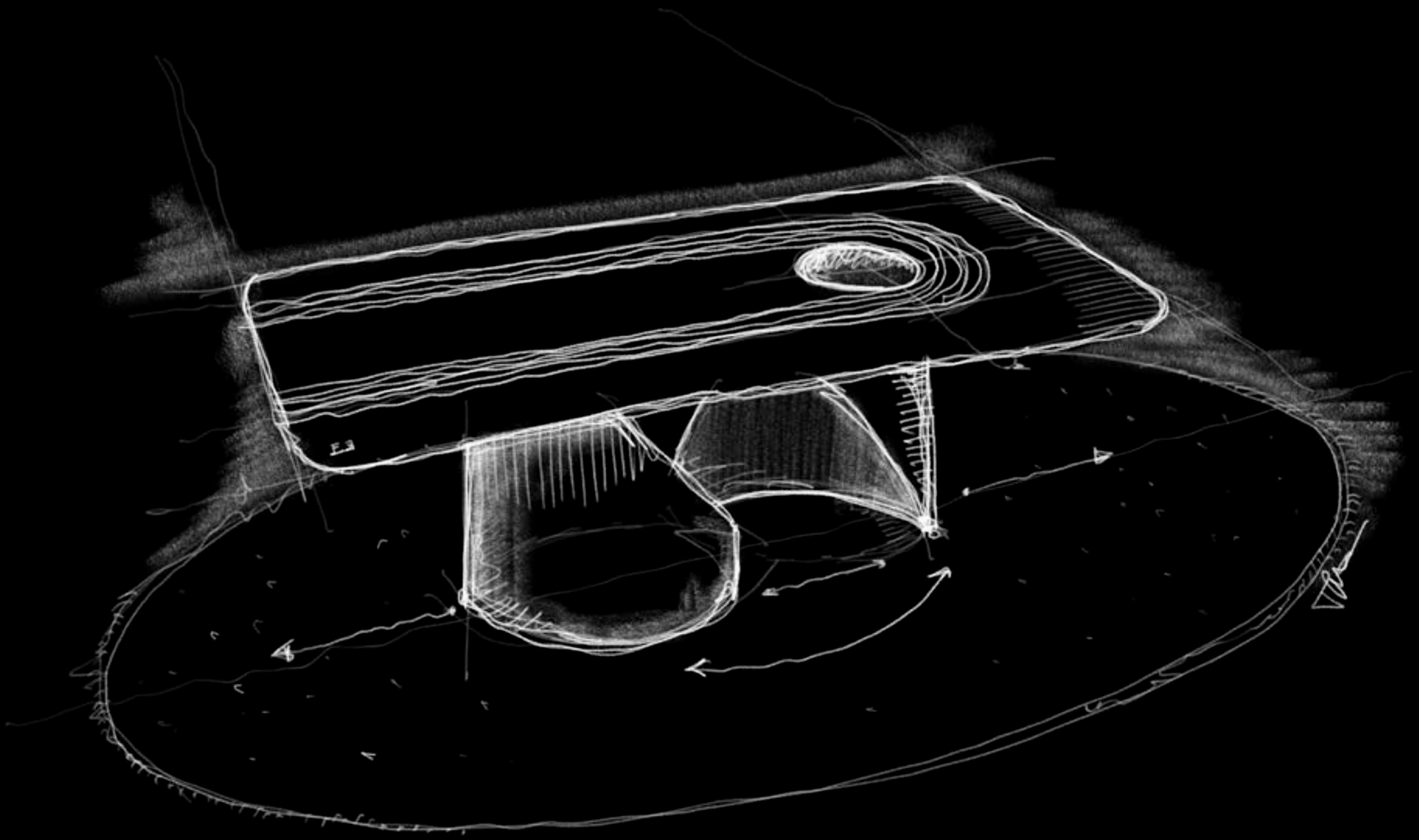

Dining

Dining Tholos

Set design dining_DTS2

Dining Tholos

Set design dining_DTS2

Set design dining_DTS2

Table - Tholos
Chair - Armonia
Console - Tholos
Mirror - Echo

Dining Tholos

Set design dining_DTS1

Dining Tholos

Set design dining_DTS3

Set design dining_DTS3

Table - Tholos
Chair - Aurora

Dining Tholos

Set design dining_DT11

Set design dining_DT11

Table - Tholos
Chair - C-Chair
Console - Torii

Set design dining_DTI1

Console - Torii

Dining Torii

Set design dining_DTI3

Dining Torii

Set design dining_DTI3

Dining Torii

Set design dining_DTI4

Dining Torii

Set design dining_DTI3

Dining Torii

Set design dining_DTI2

Set design dining_DTI2

Table - Torii
Sideboard - Focus

Dining Torii

Set design dining_DTI5

Set design dining_DTI5

Table - Torii
Chair - B-Chair

Dining Horus

Set design dining_DHS01

Dining Horus

Set design dining_DHS01

Dining Horus

Set design dining_DHS02

Set design dining_DHS02

Table - Horus
Chair - C-Chair

Dining Dobos

Set design dining_DTD1

Dining Dobos

Set design dining_DTD1

Set design dining_DTD1

Table - Dobos
Sideboard - Dobos
Cupboard - Dobos
Chair - Rose Chair

Set design dining_DTD2

Table - Dobos
Chair - T-Chair

Set design dining_DTD2

Chair - T-Chair

Set design dining_DTD2

Table - Dobos
Chair - T-Chair

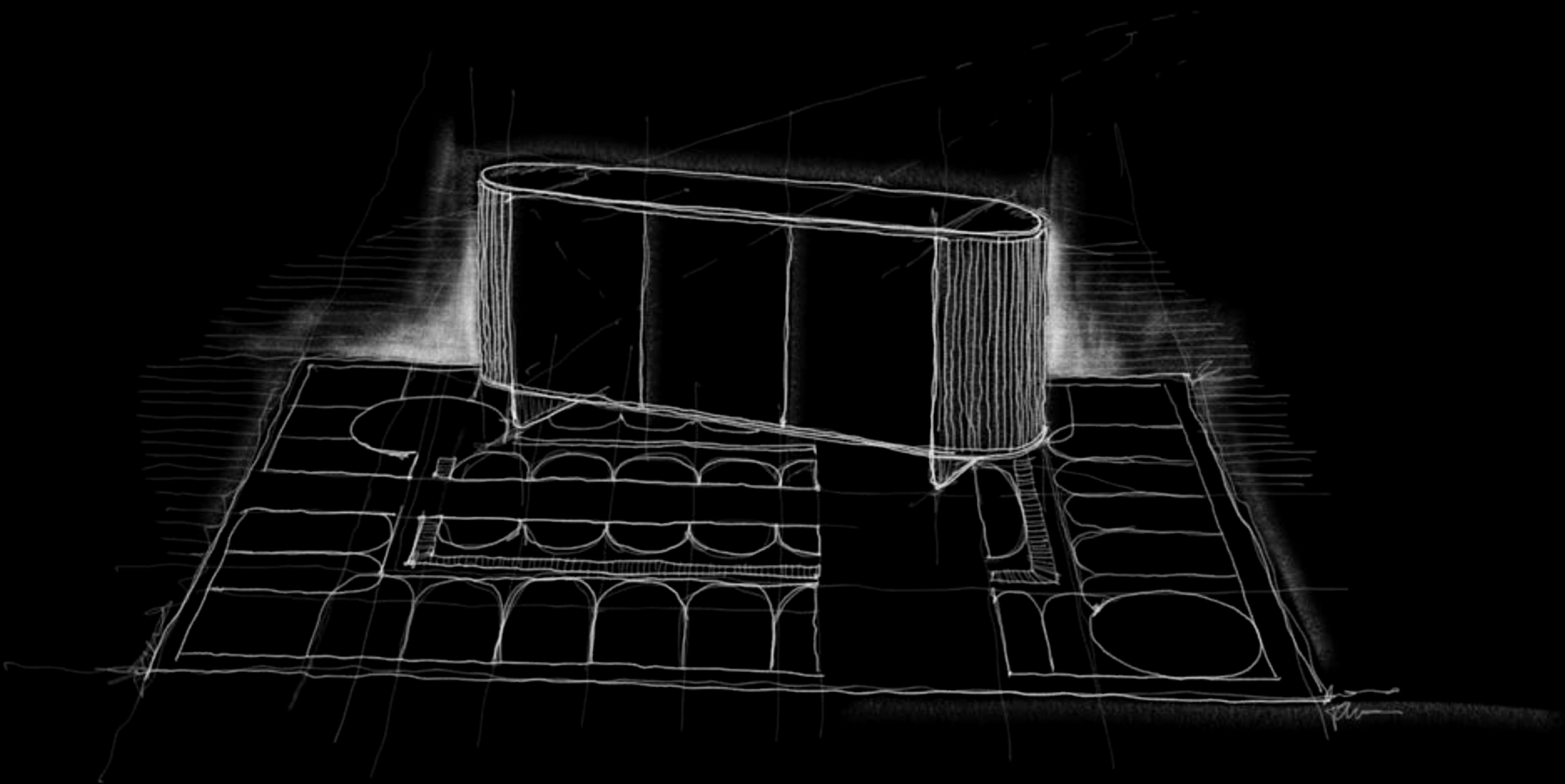

Living

Living Dobos & Matisse

Set design living_LDM01

Set design living_LDM01

Cupboard display - Dobos
Coffee table - Micelio
Sideboard 5 doors - Dobos

Living Dobos & Matisse

Set design living_LDM01

Set design living_LDM01

Console - Dobos
Mirror - Bolla
Armchair - Matisse
Side table - Dobos

Set design living_LME1

Armchair - Matisse
Sofa - Matisse

Living Torii

Set design living_LTO01

Living Torii

Set design living_LTO01

Set design living_LTO01

Bench - Torii
Coffee table - Torii
Sofa - Stone

Living Michelia

Set design living_LMA01

Set design living_LMA01

Sideboard - Dobos
Armchair - Michelia

Living Michelia

Set design living_LMA2

Living Michelia

Set design living_LMA2

Set design living_LMA2

Coffee table - Osiris
Sofa and Armchair - Michelia

Living Stone

Set design living_LSE1

Living Stone

Set design living_LSE1

Set design living_LSE1

Coffee table - Tholos
Sofa and Armchair - Stone

Living Nest

Set design living_LNT1

Living Nest

Set design living_LNT1

Set design living_LNT1

Coffee table - Osiris
Side table - Osiris
Sofa and Armchair - Nest
Sideboard - Focus
Mirror - Echo

Sideboard - Focus
Mirror - Bolla
Sideboard - Dobos
Mirror - Bolla

Living Eclipse

Set design living_LEE01

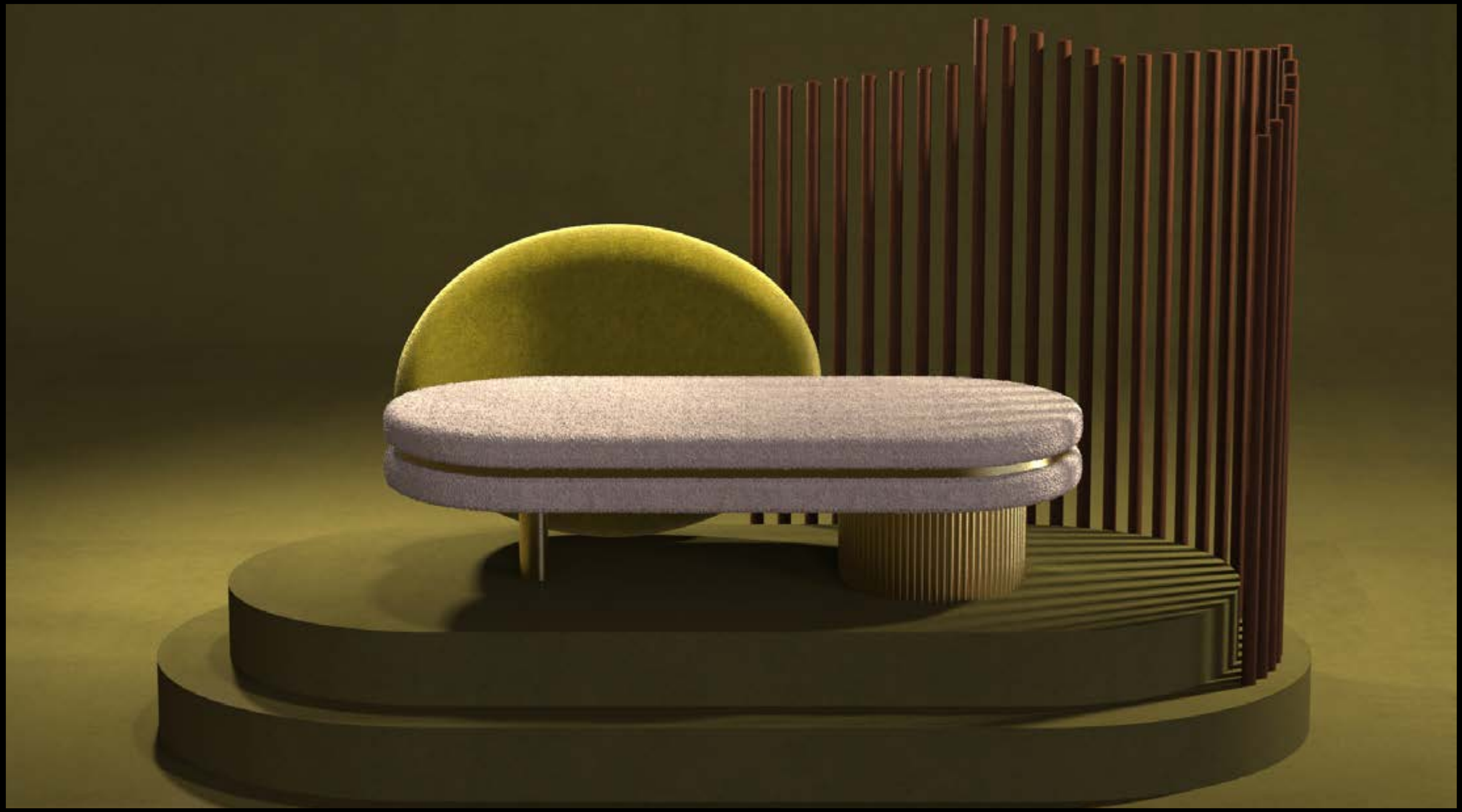

Living Eclipse

Set design living_LEE02

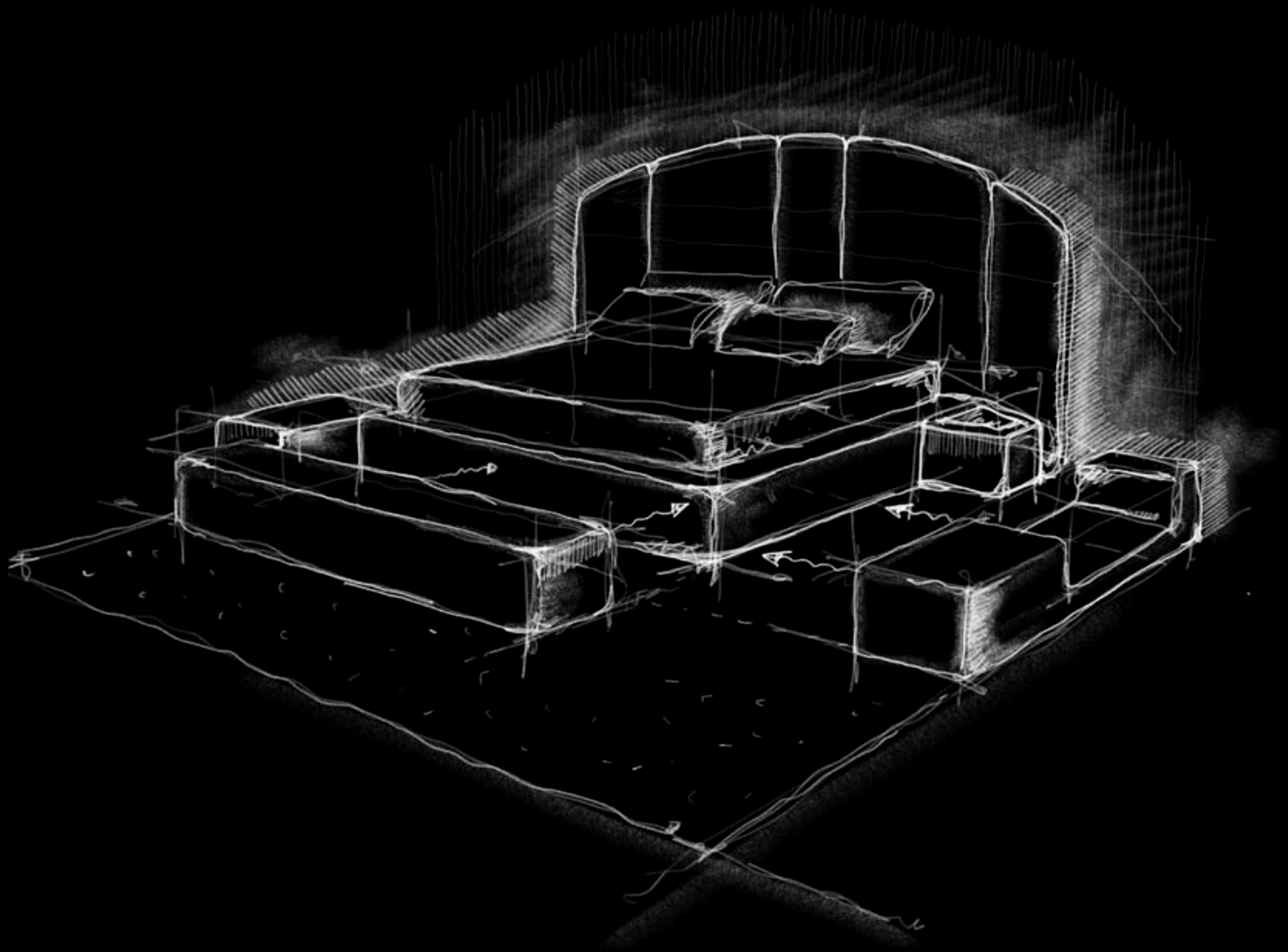

Bedrooms

Bedroom Concept 01

Set design bedroom_BCT1

Bedroom Concept 01

Set design bedroom_BCT1

Set design bedroom_BCT1

Bed - Concept 01

Bedroom Echo

Set design bedroom_BEO1

Bedroom Echo

Set design bedroom_BEO1

Set design bedroom_BEO1

Dresser and Console - Echo
Mirror - Echo

Bedroom Sophisma

Set design bedroom_BSA2

Bedroom Sophisma

Set design bedroom_BSA2

Bedroom Sophisma

Set design bedroom_BSA2

Set design bedroom_BSA1

Bed - Sophisma
Nightstand - Dobos

Set design bedroom_BSA1

Bed - Sophisma
Nightstand - Paradigma

Bedroom Cinnamon

Set design bedroom_BCN01

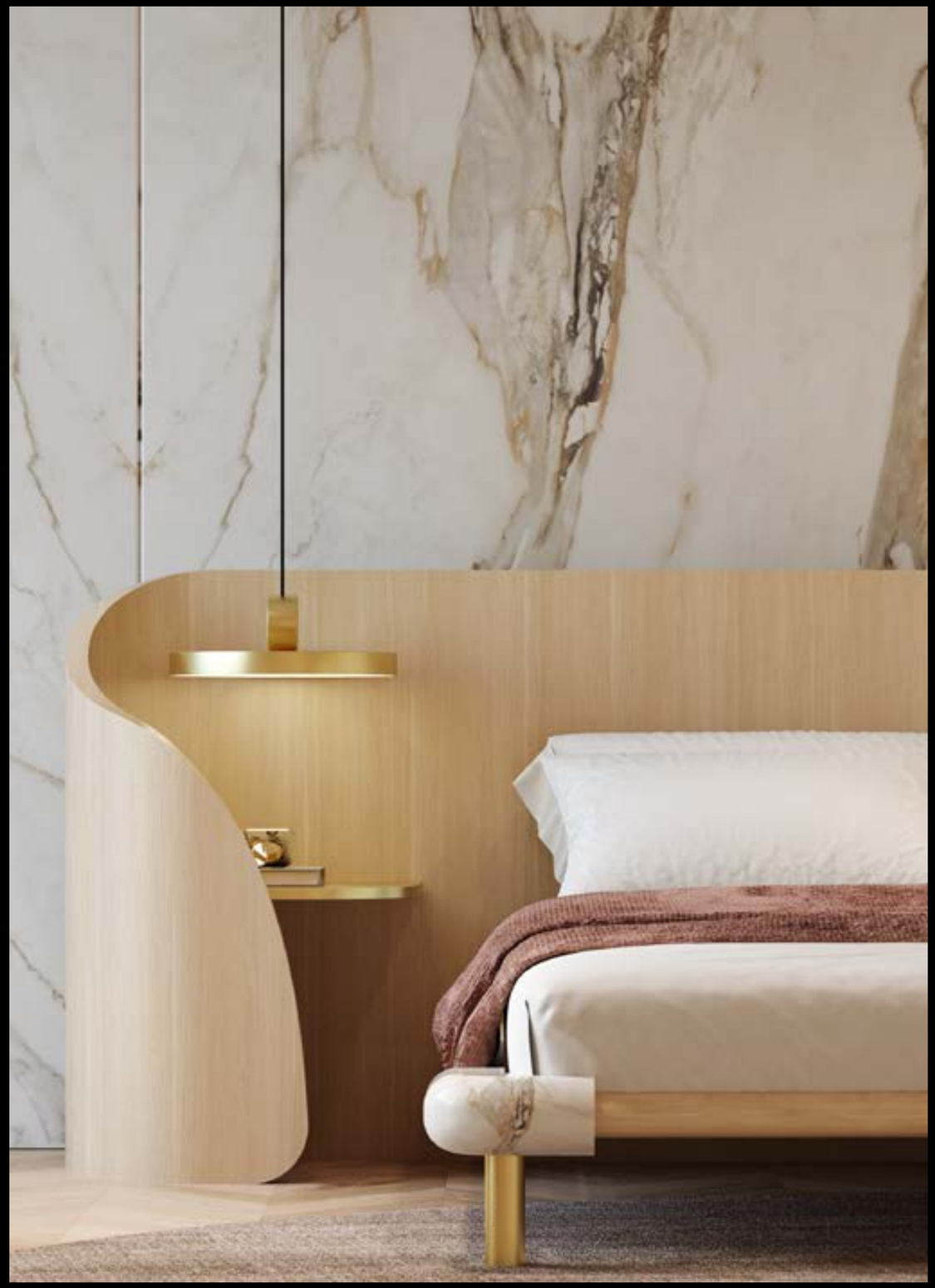

Bedroom Cinnamon

Set design bedroom_BCN02

Set design bedroom_BCN02

Bed - Cinnamon
Chaise Longue - Eclipse
Mirror - Bolla / Echo

Bedroom Cinnamon

Set design bedroom_BCN01

Set design bedroom_BCN01

Bed - Cinnamon
Coffee table - Tholos
Armchair - Paschalia

Bedroom Cinnamon

Set design bedroom_BCN03

Set design bedroom_BCN03

Bed - Cinnamon

Bedroom Nuvola

Set design bedroom_BNA01

Set design bedroom_BNA01

Vanity with mirror - Echo
Nightstand - Echo

Bedroom Nuvola

Set design bedroom_BNA01

Set design bedroom_BNA01

Bed - Nuvola
Nightstand - Echo
Dresser - Echo
Vanity with mirror - Echo

Echo collection

Set design bedroom_BNA01

Bedroom Erythea

Set design bedroom_BEA1

Bedroom Erythea

Set design bedroom_BEA1

Set design bedroom_BEA1

Bed - Erythea
Dresser and Nightstand - Echo
Mirror - Bolla
Armchair - Matisse

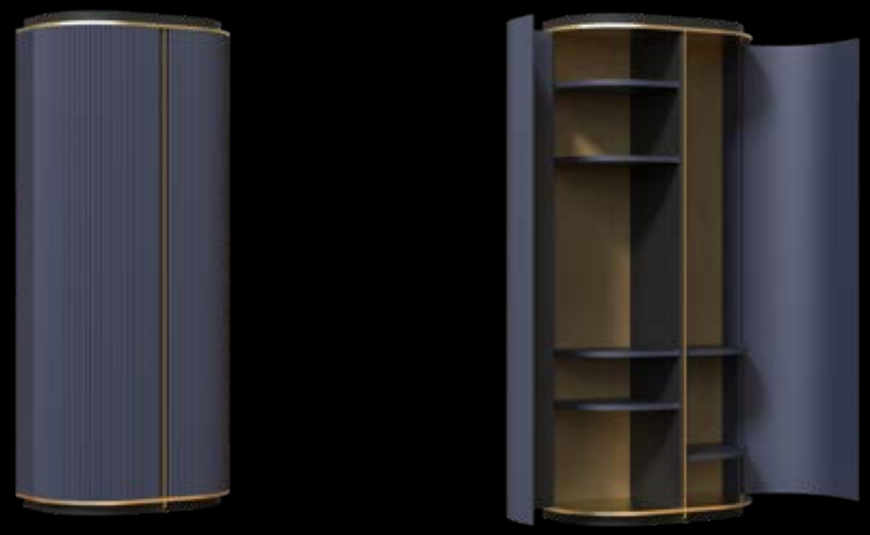

Dobos - wardrobe 2 doors

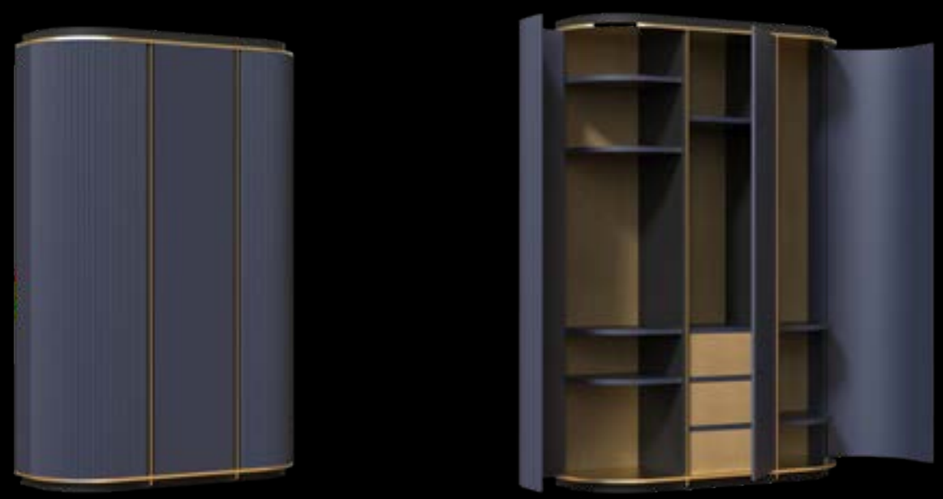

Dobos - wardrobe 3 doors

Set design living_LEE01

Chaise Longue - Eclipse
Nightstand - Dobos
Wardrobe 3 doors - Dobos

Moodboards

Moodboard 01

Moodboard 02

Moodboard 03

Moodboard 04

Products

Tholos

Double leg table

Design by LATOxLATO

For a charming dining area solution, Encore presents an elegant rectangular table. Two curved metal plates are the pillars on which the rectangular top in precious ebony, glass or lacquered rests.

The table characterized by a material contrast between the metal base and top finishes.

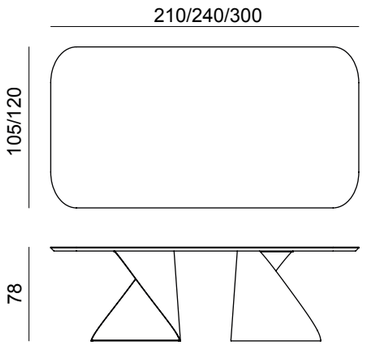

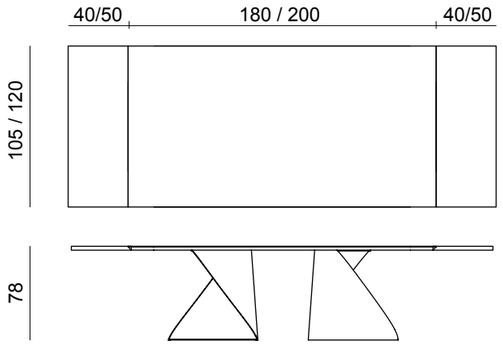

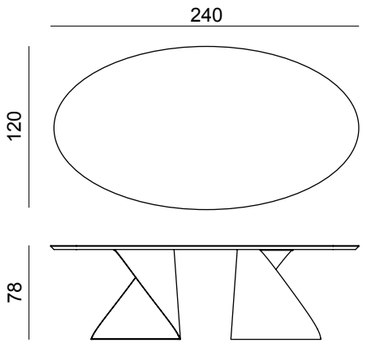

Tholos

Central single leg table

Design by LATOxLATO

Tholos table is a shimmering statement piece composed of a round top held up by a metal base. A composite of contrasting elements, massive and sophisticated, strong and passionate, the set is a harmonious and timeless whole. The material interplay of elements increases the subtle yet theatrical impact of this table. The metal plates are positioned either divided to give support to a rectangular table or semi-united to give support to a round table.

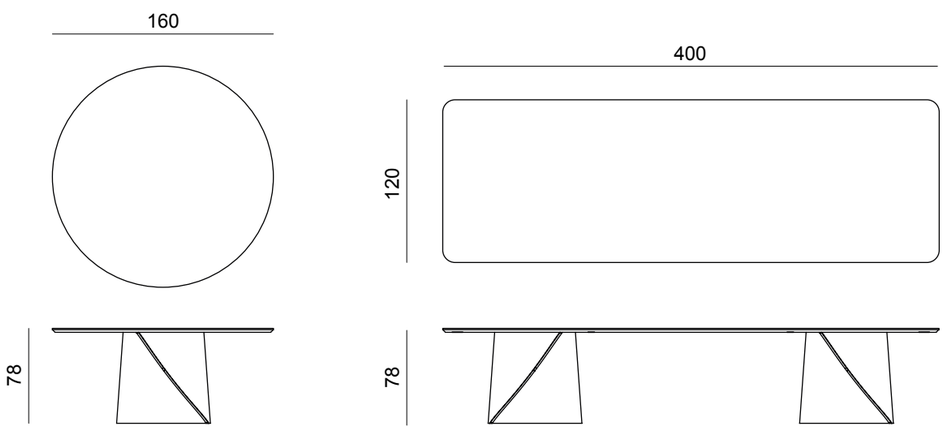

Tholos

Console Table

Design by LATOxLATO

The Tholos console table evokes classical architecture and circular shapes, suggesting a sculptural, monolithic solidity.

The leg of the Tholos is the central element of its appeal and determines its luxurious tone, while the slightly rounded shape of the top mitigates the hardness of the material.

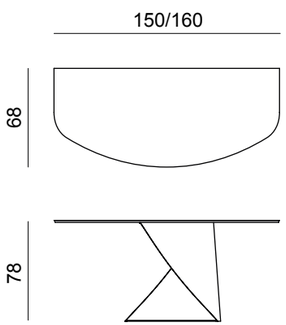

Torii

Double leg table

Design by LATOxLATO

The inspiration for the Torii table comes from the clean, sculptural lines of the ancient Japanese gates that littered the sacred, meditative spaces of sanctuaries.
Whit this luxury reinterpretation, we wish to bring a piece of the same peaceful and imposing presence in our environments.

As for tradition, it is made in a wooden finishing, but with some brass accents to add some unique feature to its very essential design.

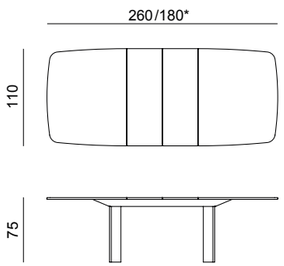

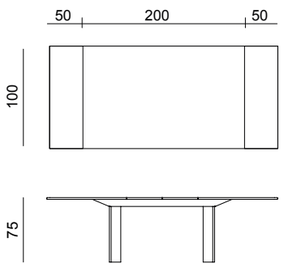

***Wood extendable table**

***Gres extendable table**

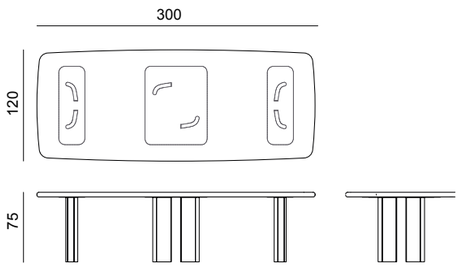

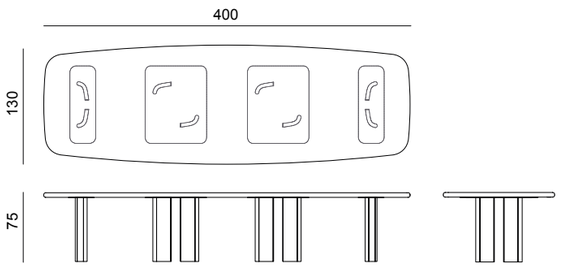

Torii

Double leg console

Design by LATOxLATO

The inspiration for the Torii console comes from the clean, sculptural lines of the ancient Japanese gates that littered the sacred, meditative spaces of sanctuaries. Whit this luxury reinterpretation, we wish to bring a piece of the same peaceful and imposing presence in our environments.

As for tradition, it is made in a wooden finishing, but with some brass accents to add some unique feature to its very essential design.

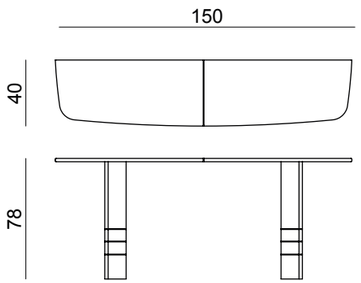

Horus

Double leg table

Design by LATOxLATO

Horus table was conceptualized around the curves of the leg. Like a flowing river eroding the rocks in its pat, the stone top of the table has been shaped to accommodate the metallic details of the legs.

This table can be realized in a variety of high quality finishes, such as hardwood, lacquer, metal, marble and others, offering a wide variety of possible customizations to fit in your dining-room.

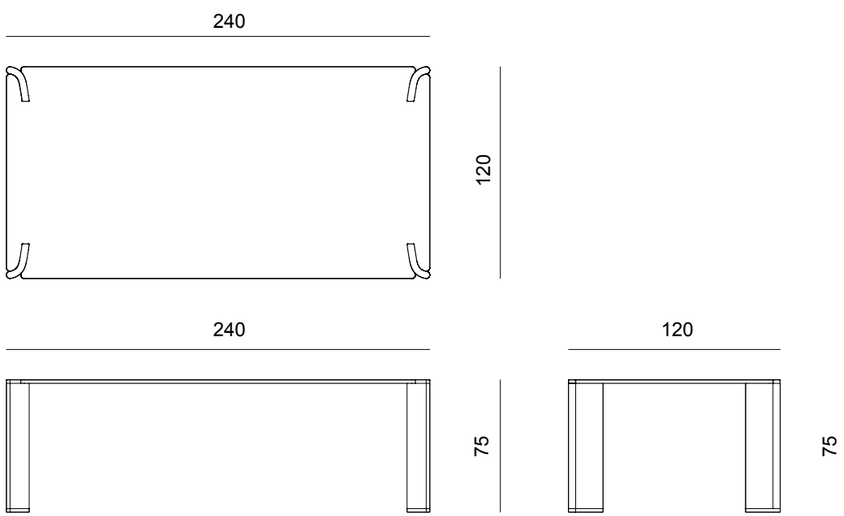

Dobos

Double leg table

Design by LATOxLATO

A collection of tables made to propose a modern clean look with a slight organic edge. The table comes in two shapes and different sizes to fit every dining room.

The slated round legs and chamfered top are made in lacquered wood, presenting a various range of colours to blend with the interiors of the house.
Complemented with brass finishes, it is the perfect timeless piece.

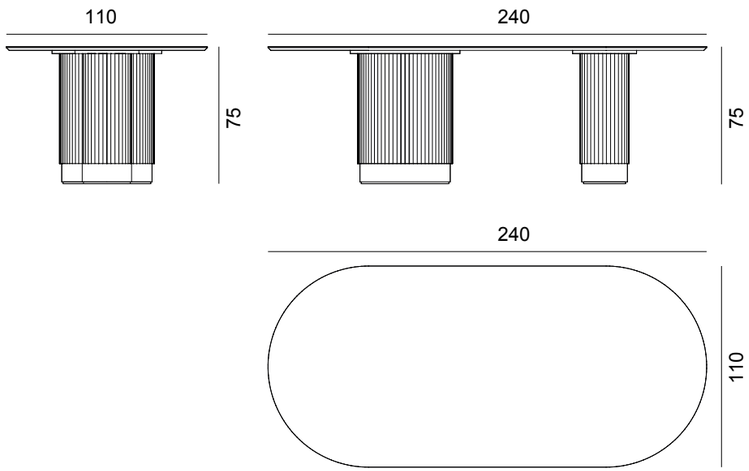

Dobos

Central single leg table

Design by LATOxLATO

A collection of tables made to propose a modern clean look with a slight organic edge. The table comes in two shapes and different sizes to fit every dining room.

The slated round legs and chamfered top are made in lacquered wood, presenting a various range of colours to blend with the interiors of the house.
Complemented with brass finishes, it is the perfect timeless piece.

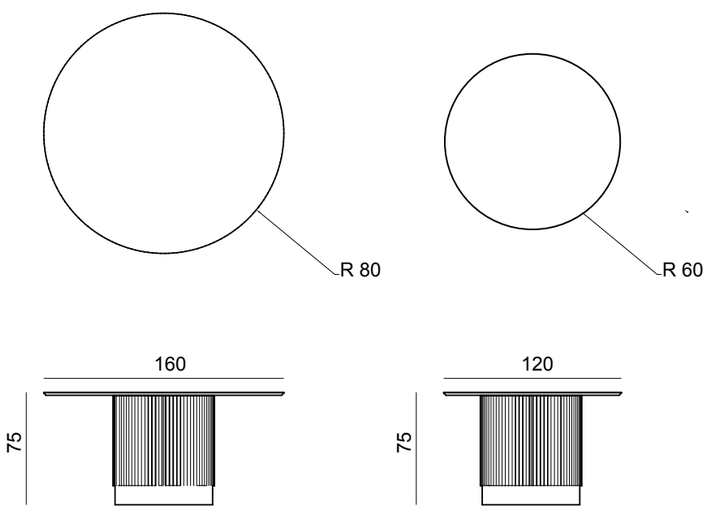

Dobos

Console Table

Design by LATOxLATO

The Dobos console table is a sculptural piece of furniture, designed to serve as a striking focal point in an entrance hall, corridor or living room. Its design plays on the balance between soft shapes and a refined texture.
The top stands out for its elongated shape, which ends with delicately rounded edges. This curved line softens the presence of the piece, making it less imposing and more harmonious than a classic rectangle.
The console table is supported by two semi-circular, cane-work legs, positioned in continuity with the top above to offer maximum stability and a balanced aesthetic.

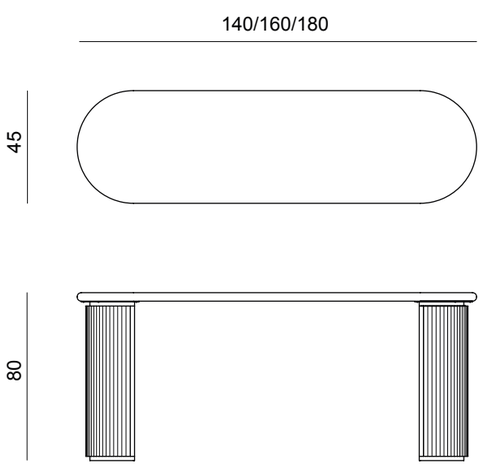

Dobos

Sideboard

Design by LATOxLATO

Dobos 3 doors sideboard features precious details, sculptural round silhouette in wooden structure, metal lines and canneté finish. A masterpiece that recalls the craftsmanship & refined handwork.

Dobos fits into any living or dining room thanks to the versatility of design & customization, which allows combinations of colors and materials with a strong scenic impact.

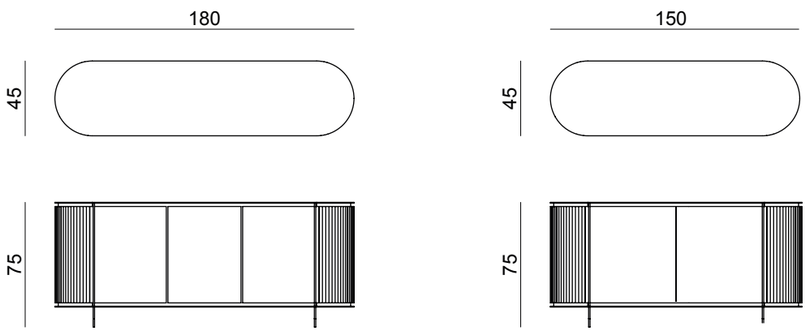

Dobos

5 doors sideboard

Design by LATOxLATO

Dobos 5 doors sideboard features precious details, sculptural round silhouette in wooden structure, metal lines and canneté finish.
A masterpiece that recalls the craftsmanship & refined handwork.
Dobos fits into any living or dining room thanks to the versatility of design & customization, which allows combinations of colors and materials with a strong scenic impact.

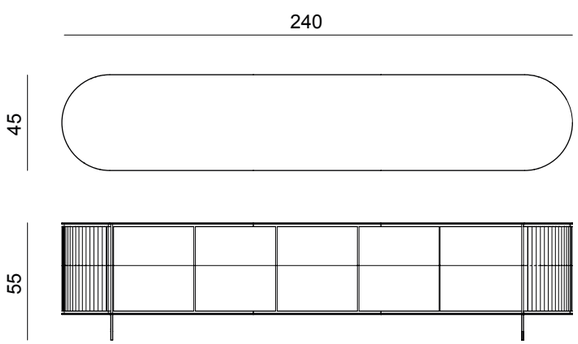

Dobos

Cupboard display

Design by LATOxLATO

With its imposing modern looks, Dobos cupboard is the right piece for a foyer as well as a nice complement for a living room.

Made out of lacquered wood and a lustrous brass finish, it comes in two different configurations: display (with a glass door) or conceal (with a lacquered one) to put your objects in display, or to hide them from prying eyes.

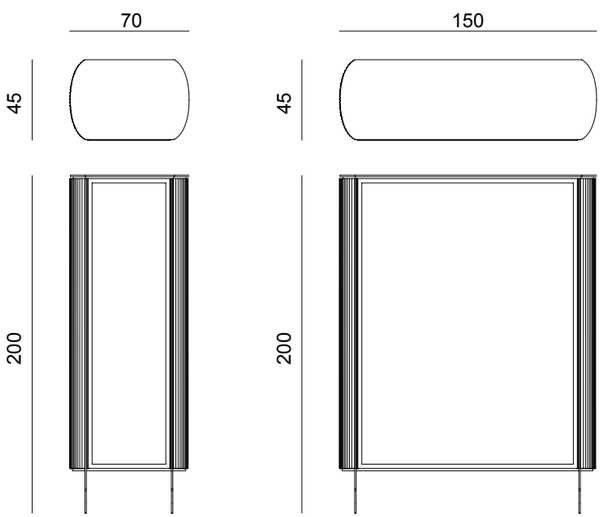

Focus

Sideboard

Design by ENCORE design studio

This sideboard gets its inspiration from the roman fireplace, a staple in the tradition of every anchient house. In roman times, no living space could exist without one.

Focus sideboard, with its warm essences is going to bring warmth and coziness to the room. Focus is avaible in an array of wood finishes with brass details.

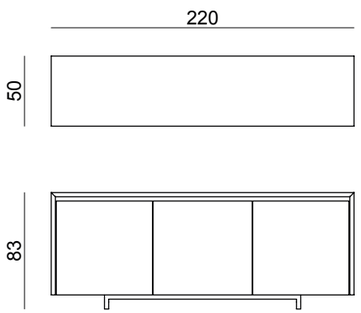

Armonia

Upholstered chair

Design by ENCORE design studio

The design is characterised by clean lines and an organic structure that conveys a sense of lightness and solidity, thanks to its Mid-Century style revisited with a modern twist.
This chair is perfectly suited to minimalist environments or prestigious dining rooms.
It is a piece that communicates discreet luxury and attention to detail.

The chair is made with a refined solid wood structure in warm, dark tones that highlight the natural grain of the material.

The armrests follow a geometric and slender profile, connecting smoothly to the rear legs.
The seat and backrest consist of a padded monocoque with soft lines, designed to ergonomically accommodate the body.

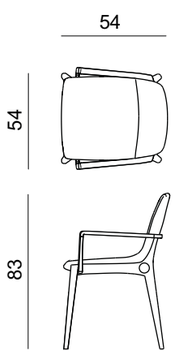

Aurora

Upholstered chair

Design by ENCORE design studio

Aurora is a chair defined by enveloping comfort and timeless elegance. The wooden legs enhance its refined character, making it ideal for prestigious dining rooms and large-scale interiors. A versatile and sophisticated choice, perfectly suited to high-end lounge spaces and contract projects.

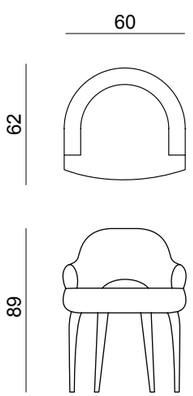

Bonnet

Upholstered chair

Design by ENCORE design studio

The bonnet is the iconic headpiece every Victorian woman need in her wardrobe.
Often lined in high quality materials, no outfit was complete without one.

Made in a classical shape for everyday use, Bonnet is the right chair to blend in every room.

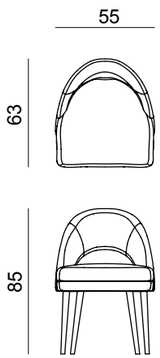

Dolcevita

Upholstered chair

Design by ENCORE design studio

The Dolcevita chair interprets the discreet elegance of 1950s chairs with contemporary sensitivity. A solid wood structure with soft, slender lines creates a harmonious profile in which every curve seems to arise from a natural gesture.

The legs lend visual lightness and momentum, while the shaped backrest embraces the body with a gentle, welcoming curve. The joints and fittings, crafted with precision, enhance the purity of construction and the quality of the material, allowing the wood to speak through its grain and warm tactility.

The upholstered seat, wide and proportionate, is covered in fabric or natural leather, with comfort and softness updated to the language of contemporary design.
Available in different woods — oak, walnut or stained ash — the “Edera” chair is suitable for domestic and contract contexts, combining memory and modernity in a perfect balance between form, function and style.

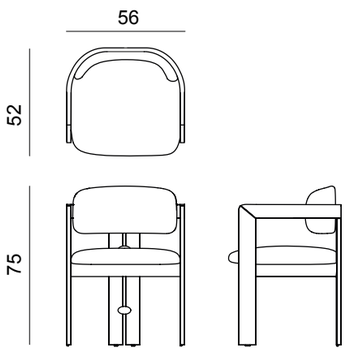

Rose Chair

Upholstered chair

Design by LATOxLATO

Taking inspiration from one of the oldest, most well-known flowers to adorn the gardens of Italian nobility since the dawn of time, Rose chair was meant to mimic the luscious feeling of touching a rose petal, thus proposed in rich velvet or nabuk.

It is a simple, luxurious addition to any space and, like a rose, it has many uses, from the living room or dining room, to hospitality, in front of a vanity, or in a corner of your bedroom.
It is versatile and perfect in every environment of a house.

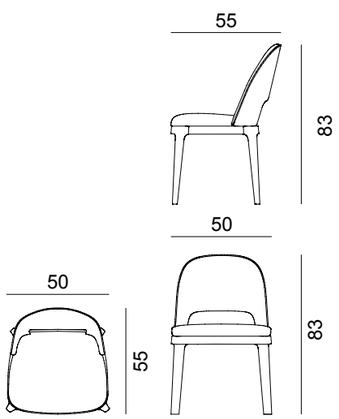

B-Chair

Upholstered chair

Design by LATOxLATO

B-Chairs in a green textile and golden powder-coated base.

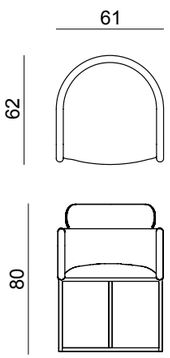

C-Chair

Upholstered chair

Design by LATOxLATO

C-chair is a lower back interpretation of a modern chair. It brings its modest height to the table, ensuring a minimalist appearance while still offering lumbar support.
C-chair derives its name from the upper shape of its seat.

Avaible in a vast array of textiles and metal finishings, it can easily conform to your interior design style.

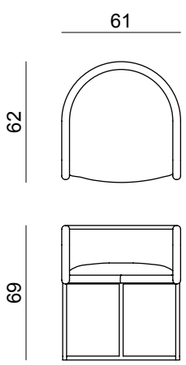

T-Chair

Upholstered chair

Design by LATOxLATO

With its formal, essential lines, T-chair is a modern take on a classic model.
Made to bring a touch of luxury to the table, it gets its name from the elegant T shape of its back. In its simplicity, it is probably one of the most iconic pieces.

Avaible in a vast array of textiles and metal finishings, it can easily conform to your interior design style.

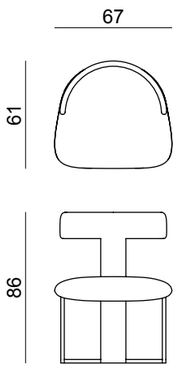

Micelio

Coffee tables

Design by LATOxLATO

The Micelio set is an expression of contemporary design that combines aesthetic lightness with a solid structural presence, making it a versatile focal point for any modern living room. The set consists of two coffee tables of different sizes, designed to be used in pairs, stacked or separated, offering maximum flexibility.
Each coffee table rests on a single cylindrical base with a generous diameter, ensuring stability and a strong visual impact. The top is made of an irregularly shaped lacquered wood sandwich structure, which guarantees lightness and an elegant and refined colour contrast.

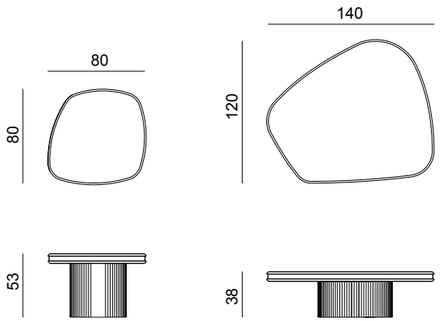

Osiris

Side table and coffee tables collection

Design by LATOxLATO

With its glossy, opulent appearance, Osiris is made up of 3 volumes, which can sit separately or overlap, offering greater versatility. It is the right choice for every space to be placed right in front of a sofa or next to an armchair or even paired with some cushions on the floor for a traditional oriental dinner.

Osiris was thought in a gold looking finish, with a customizable top material.

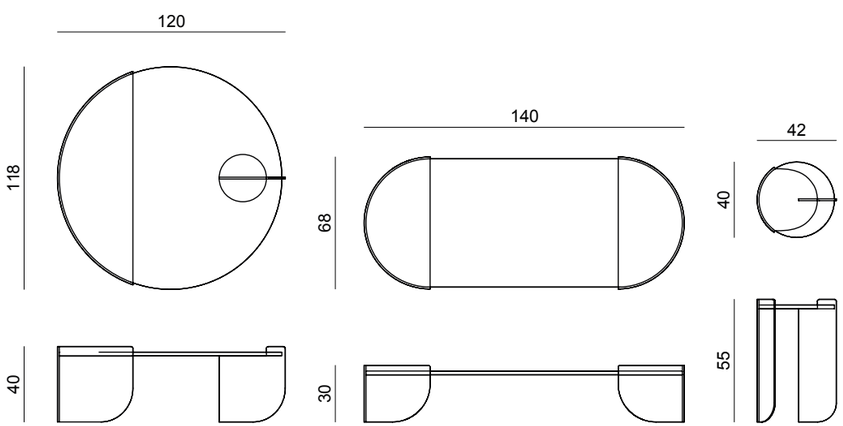

Torii

Coffee tables

Design by LATOxLATO

The Torii collection stems from the idea of a single formal gesture: a sinuous, curved leg, a distinctive feature that defines the identity of the entire series.

Made of curved wood, the leg develops as a continuous line that supports and embraces the top, giving the coffee table a balance between lightness and structural strength.
Starting from this common element, the collection is available in different heights and sizes, transforming into Low coffee table, Side table, and Side table.

The modularity of the height allows for the creation of dynamic and harmonious compositions: the different elements can coexist in the same environment, communicating through the repetition of the curved shape which, while varying in proportion, maintains an elegant and contemporary visual consistency.

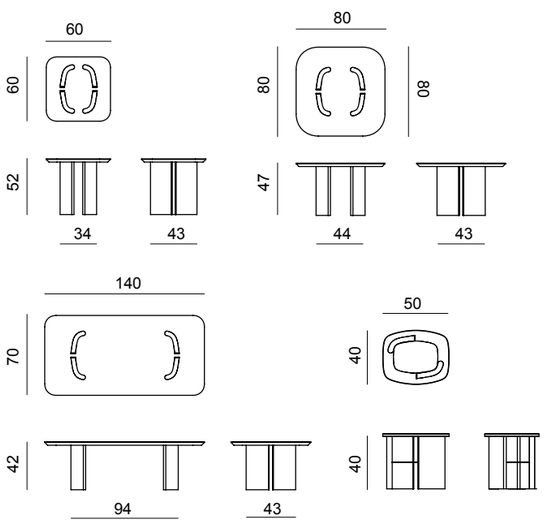

Tholos

Side table and coffee tables collection

Design by LATOxLATO

Tholos coffee tables represent the perfect combination of essentiality and elegance in material contrast.
A metal conical body supports the round top in stone, glass or lacquered wood.
Tholos tables are made up of three volumes, which can sit separately or overlap, offering greater versatility.

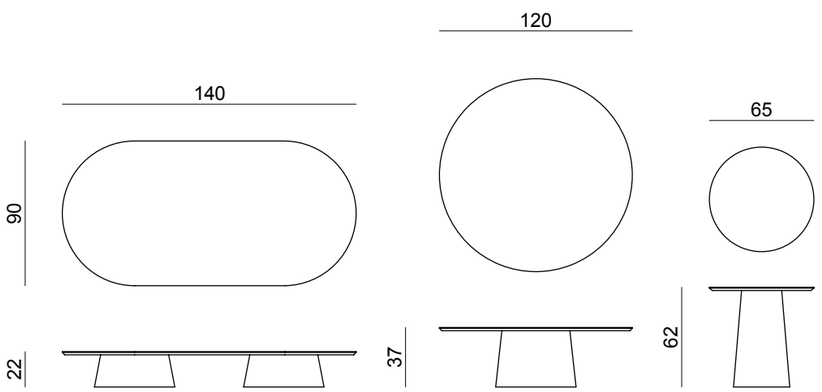

Torii

Bench

Design by LATOxLATO

The Torii bench stems from the same formal research that gave rise to the collection: a single soft, continuous gesture generates the curved wooden leg, a structural and identifying element of the entire project.
This leg, made of steam-bent solid wood, stands out for its fluid silhouette that supports the seat with natural elegance, as if it were an organic extension of the top.
The bench is composed of a modular repetition of this curved leg: each additional element lengthens its shape and defines its size. In this way, the bench can be freely adapted to different living contexts — from the entrance to the dining area, from the living room to the bedroom — while maintaining a strong aesthetic consistency.
The seat is upholstered and covered in natural fabrics or leathers, for discreet and refined comfort that dialogues with the wooden structure. The contrast between the softness of the upholstery and the solidity of the curved leg creates a visual and tactile balance that invites use and contemplation.
Available in several lengths and finishes, the 'Torii' bench interprets the theme of modularity with grace and functionality, blending craftsmanship and contemporary design in a single coherent gesture.

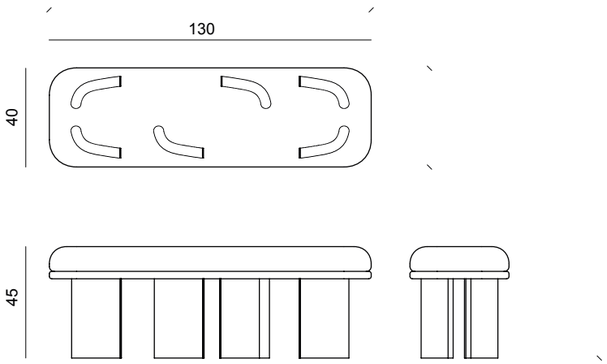

Paschalia

Upholstered chair

Design by LATOxLATO

The distinctive and refined appearance of Paschalia armchair blends perfectly in environments with a sophisticated taste, it sits atop a truncated pyramid with rounded edges to reconcile the concepts of elegance and charm. Produced with fine materials such as wood, leather, and gilded finishes.

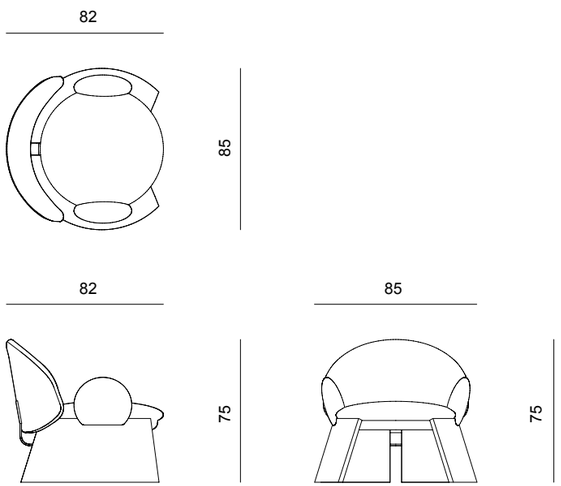

Eclipse

Chaise longue

Design by LATOxLATO

Eclipse chaise longue was conceived as a hero piece to be placed centrally in a room, thanks to its curved lines that can be admired from all perspectives; the rounded shapes, emphasized by the gold lacquered base, are made lighter by the wide empty space below the seat.
The off-centered backrest makes this charming piece of furniture suitable for being used also as a small sofa.

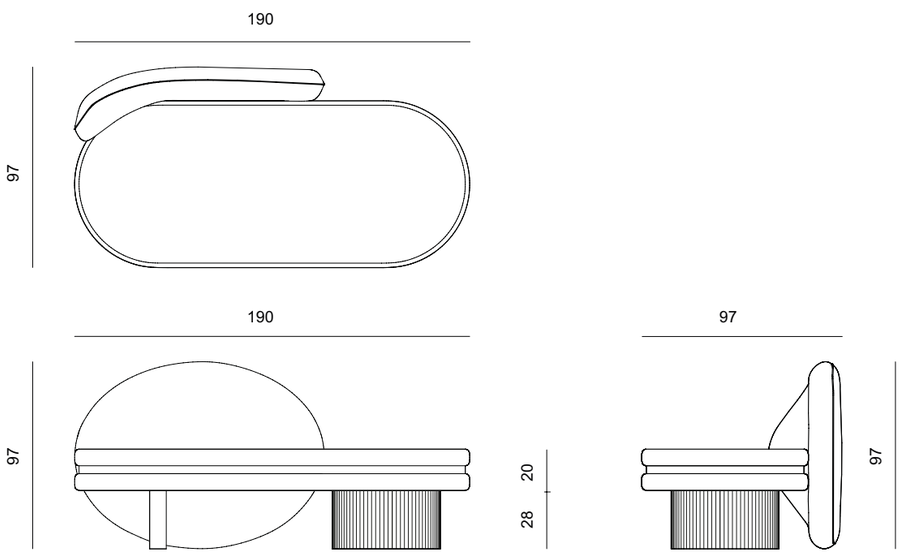

Michelia

Upholstered armchair

Design by LATOxLATO

From the soft glow of a flowering magnolia tree, this armchair was inspired by the starkt contrast of the off-white flowers and the rich brown of the branches.
Studied for comfort, it makes a nice addition to any corner, giving this armchair the potential to become the most used piece of the livingroom.

Michelia is dressed in buclè paired with high quality Italian wood.

Michelia M

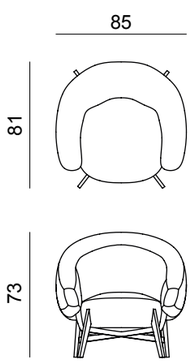

Michelia XL

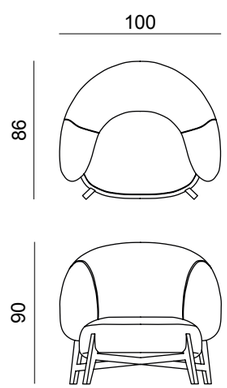

Michelia

Sofa collection

Design by LATOxLATO

Every detail is meticulously designed by renowned architect and experienced artisans to spread in Your home a sense of pure comfort & luxury.

The wooden design sofa Michelia has organic, sinuous and rounded shapes that enhance its aesthetics, punctuated by a fully engineered and hand-finished solid wood frame, it accommodates a refined upholstered bouclè seat.

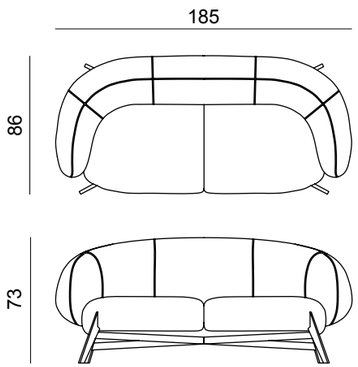

Stone

Upholstered armchair

Design by LATOxLATO

The design behind the Stone collection was inspired by the natural, organic shape of stones left to be lulled by the river currents, turning a sharp rock into a smooth, matte surface over the centuries.

Stone collection is here proposed in premium quality bouclè textile, to transpose some of the natural texture elements found around the river bancks of Emilian estuaries.

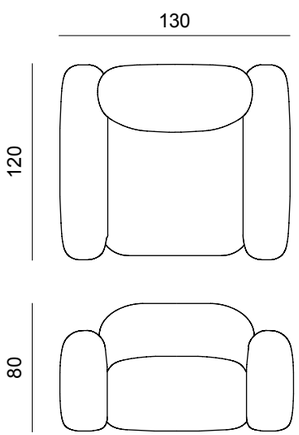

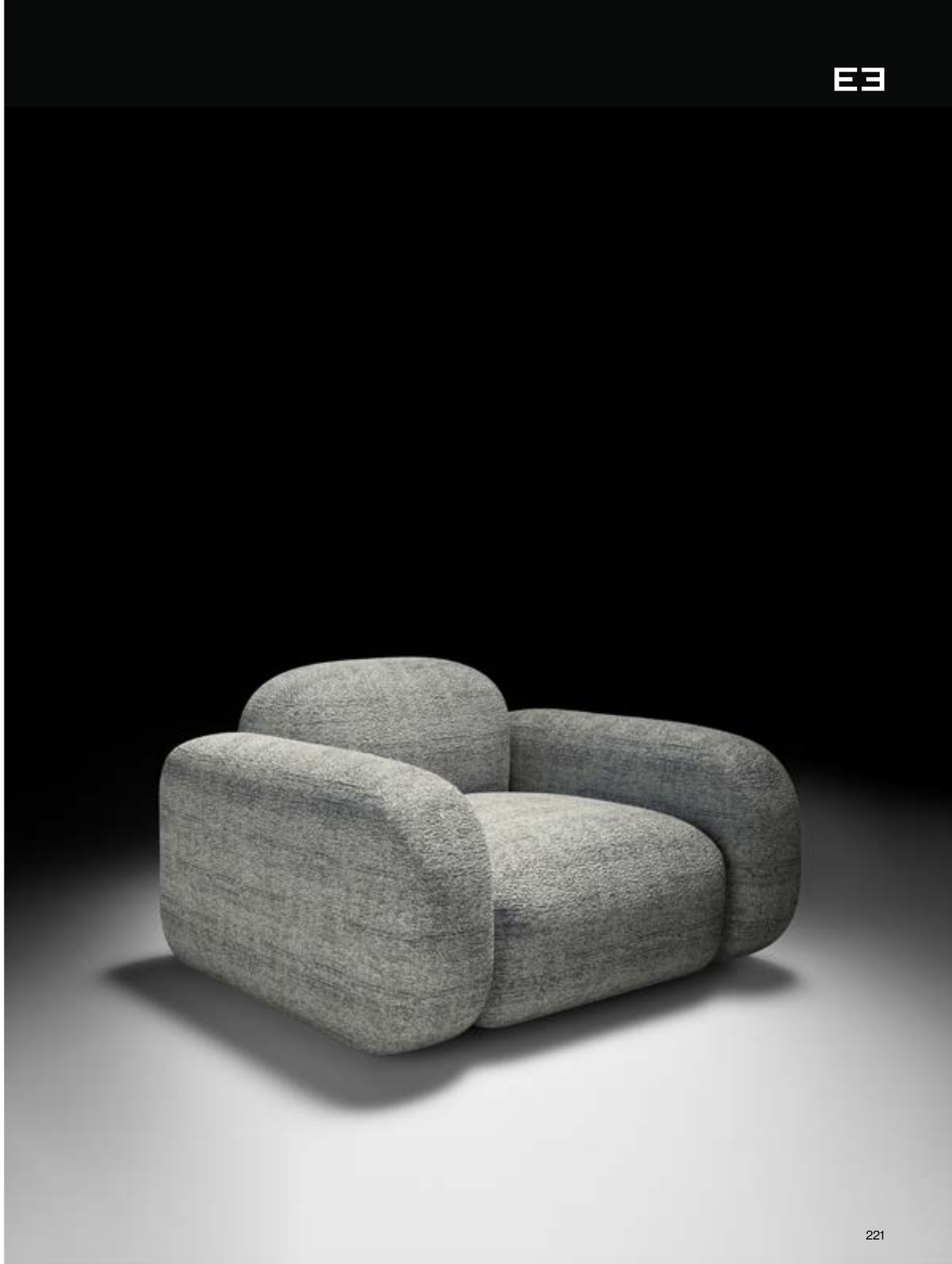

Stone

Sofa collection

Design by LATOxLATO

The design behind the Stone collection was inspired by the natural, organic shape of stones left to be lulled by the river currents, turning a sharp rock into a smooth, matte surface over the centuries.

Stone collection is here proposed in premium quality bouclè textile, to transpose some of the natural texture elements found around the river bancks of Emilian estuaries.

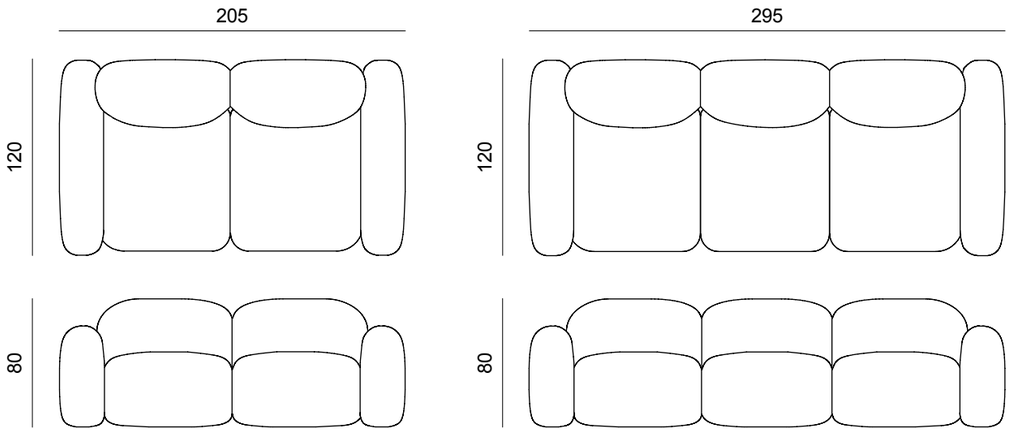

Nest

Sofa collection

Design by ENCORE design studio

Drawn from the florid, luscious fields of Italian hillside. The Nest sofa collection has its inspiration in the black orris flowers spontaneously dotting the grazings in clusters of velvety black crowns. With its softness, organic shape and durable materials, it is made to transform every space in a cozy environment.

As a tribute to the plant, the collection was originally thought to be made in the same velvet material and its complemented by a rounded brass base.

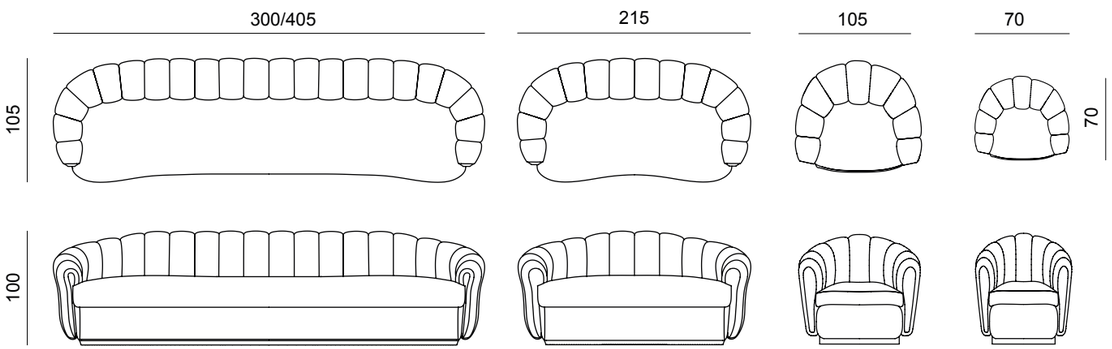

Matisse

Corner sofa collection

Design by ENCORE design studio

Matisse was the main esponent of the fauvism, a pittoric current that deeply influenced the simple lines and strong colors of this eclectic collection.

Organic in nature, it brings its sinous lines into the livingroom, with the aim to soften the sharp, straight lines of our environments.
Matisse comes in a wide variety of finitures, but always with metal insertions.

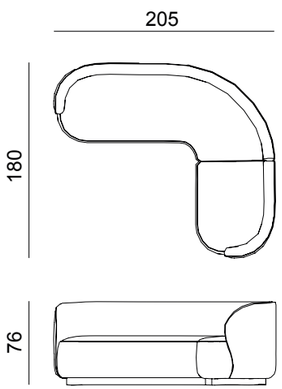

Matisse

Sofa collection

Design by ENCORE design studio

Matisse was the main esponent of the fauvism, a pittoric current that deeply influenced the simple lines and strong colors of this eclectic collection.

Organic in nature, it brings its sinous lines into the livingroom, with the aim to soften the sharp, straight lines of our environments.
Matisse comes in a wide variety of finitures, but always with metal insertions.

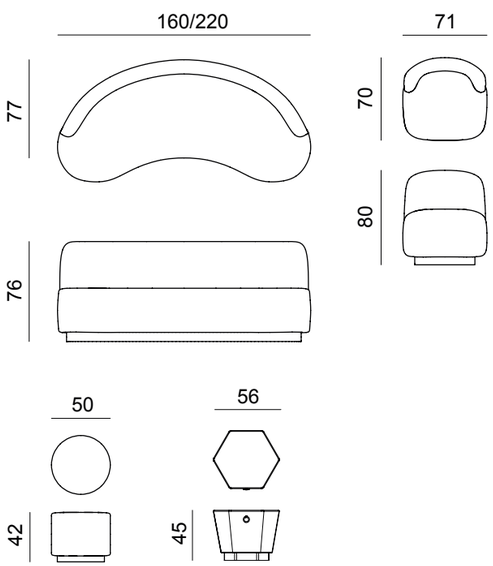

Concept 01

Double bed

Design by LATOxLATO

This bed was born from the need for an element that could adapt to all situations, from private to contract. For this reason, a study was made to support modules that would give the possibility of a system and a simple bed. The various options of aggregation of the elements allow it to adapt to any environment in which it is inserted.

The intimate and cosy space expresses the elegance and refinement of a domestic luxury, enhanced by the olive green colour. For sleeping, relaxing, regaining energy, reading, meditating, dreaming, feeling at home. Sophisticated allure and modern charm for the Concept 01 bed.

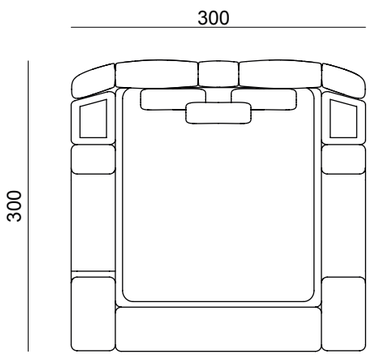

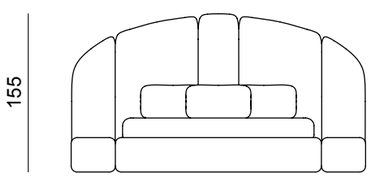

Sophisma

Double bed

Design by LATOxLATO

From the Greek Sophos: Wise, clever, this bed is a synthesis of curved lines and soft edges, made to resolve a complex process into a simple appearance while still maintaining all of its opulence. Sophisma, with its freestanding headboard, it's more than just a simple bed, it is a 360° artwork for your bedroom.

Made of nabuk leather and opaque hardwood with brass finishings, it is a modern take on what Italian tradition suggests.

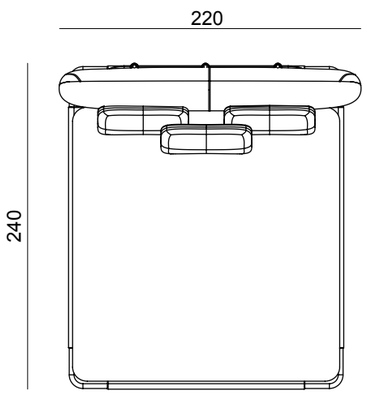

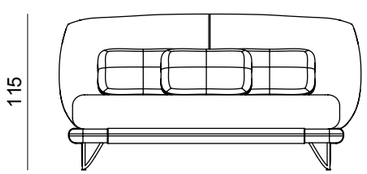

Cinnamon

Double bed

Design by LATOxLATO

Born during a meditation on wood and stone, Cinnamon bed puts together high quality Italian materials and highly skilled craftmanship to generate a sculptural piece able to offer a fascinating to your night spaces.

Its big, rounded frame will immediately become the central piece of your bedroom, attracting the stares of everyone in the room. This bed could be positioned in a classic fashion against the wall or to separate the space as a freestanding piece. As such, it is also perfect for hotellerie and hospitality.

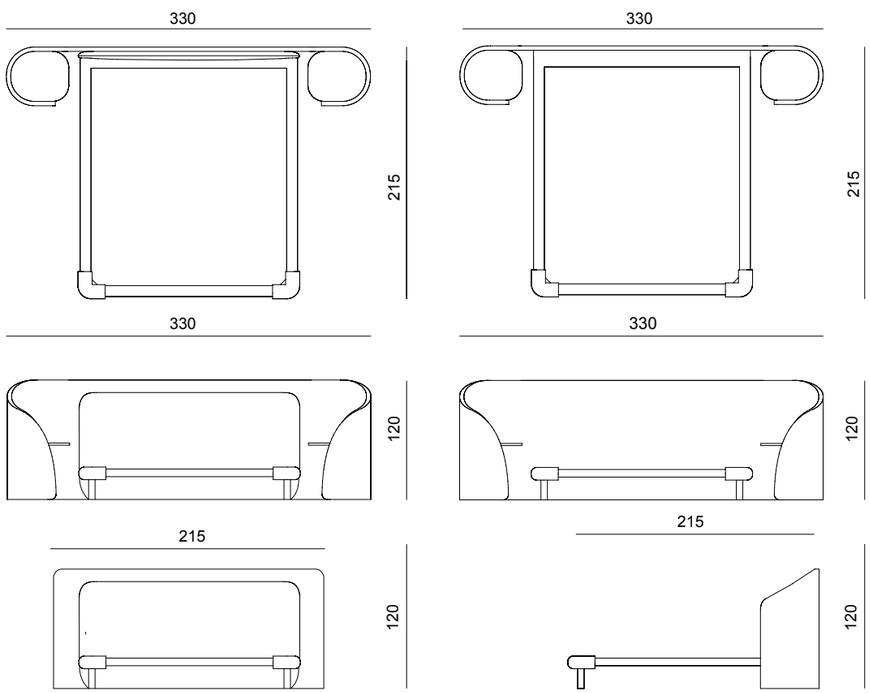

Nuvola

Upholstered bed

Design by LATOxLATO

Nuvola upholstered bed exudes elegance and conveys a feeling of luxury and impeccable taste. Its tailored details and rounded corners lend a sense of sophistication to its simple design. Its vaporous softness, fully upholstered in premium materials, and generous size creates a welcoming and sumptuous space, inviting relaxation and rest.

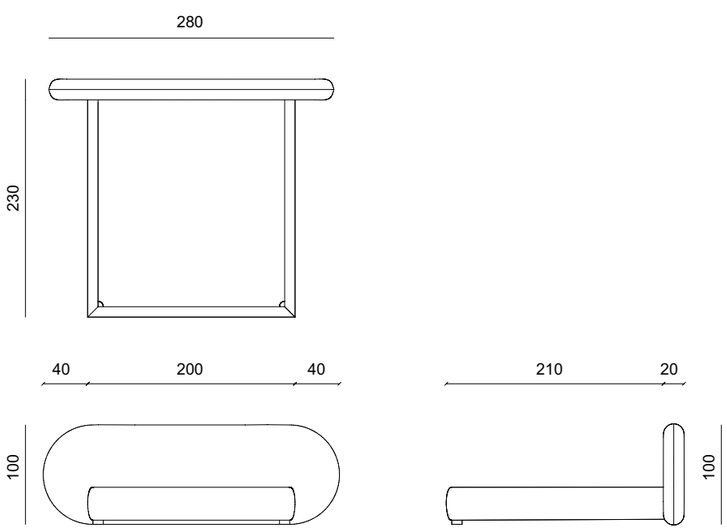

Erythea

Double bed

Design by LATOxLATO

As one of the Hesperides, nymphs of the evening and the last rays of sun, Erythea bed is designed as a symbol of relaxation at the end of the day.

Here proposed in a soft textured velvet to be warm and smooth to the touch it is meant as a comfortable furniture piece to spend the cold winter nights. Designed with a plump, supple frame to lay back and read a book in complete relax.

Echo

Nightstand

Design by LATOxLATO

Named after the nymph, Echo nightstand is a resonance of Italian luxury and love for details. It is the perfect commistion of a sharp, clean concept, rounded by an organic, sanded siloutte.

Like a river stone smoothed by the currents, Echo nightstand shines of a natural, matte texture, rendered with a fine lacquered finish.

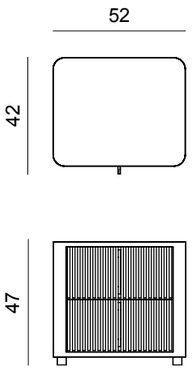

Echo

Dresser

Design by LATOxLATO

Named after the nymph, Echo Dresser is a resonance of Italian luxury and love for details. It is the perfect commistion of a sharp, clean concept, rounded by an organic, sanded silhouette.

Like a river stone smoothed by the currents, Echo Dresser shines of a natural, matte texture rendered with a fine lacquered finish.

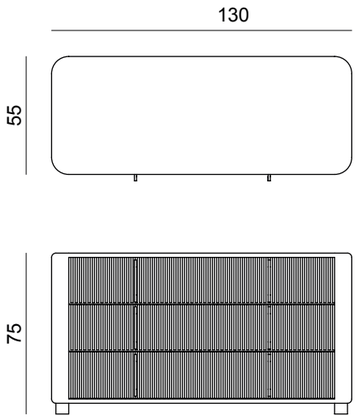

Echo

Vanity with mirror

Design by LATOxLATO

Named after the nymph, Echo Vanity is a resonance of Italian luxury and love for details. It is the perfect commistion of a sharp, clean concept, rounded by an organic, sanded silhouette.

Like a river stone smoothed by the currents, Echo Vanity shines of a natural, matte texture rendered with a fine lacquered finish.

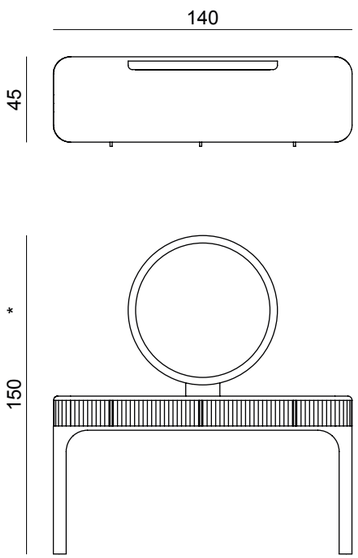

Mirror included

Dobos

Sidetable

Design by LATOxLATO

With this piece we aimed to mix the functionality of a nightstand with the versatility of a coffee table. Dobos side table is part of the Dobos collection, and as such, it is made out of wood and fine metal sheets in a brass finish.

The customizable length of the supporting base gives you the freedom to put it next to a bed, next to an armchair or to blend it in a coffee table composition. Everywhere you put it, it will help to collect and conceal all the clutter generated during your daily routine.

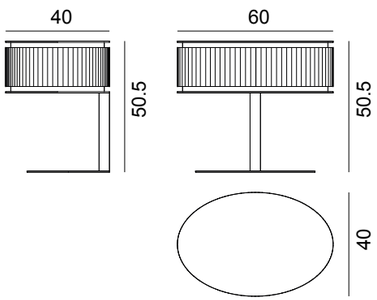

Dobos

Nightstand

Design by LATOxLATO

For the Dobos collection, another object to complement your bedroom with a luxurious piece of Italian design.

Made out of wood and fine metal sheets in a brass finish, this nightstand is designed to bring a modern feel with its rounded, slated wood sides, contrasting with the sharp lacquered wood of the drawers.

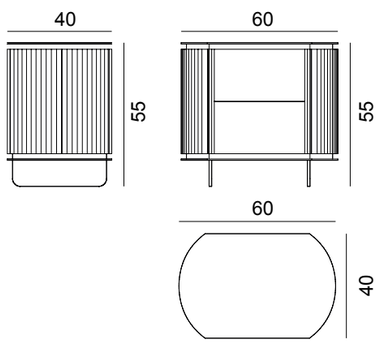

Paradigma

Nightstand & console collection

Design by LATOxLATO

With its soft, essential lines, Paradigma is, as its name suggests, the epitome; the perfect example of its kind. With this philosophical interpretation of the Italian countryside, this collection has been realized to bring the best of Italian materials and craftmanship into your houses.

Paradigma collection is made of hardwood and nabuk leather, two very simple materials to ennoble a very clean, functional design.

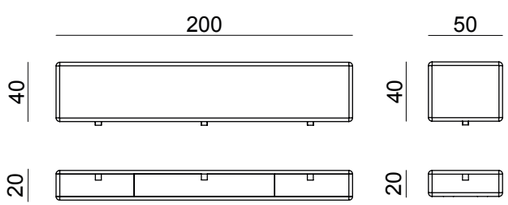

Bolla

Floating wall mirror composition

Design by LATOxLATO

Bolla Mirror enchants with its gold metal frame, it represents a masterpiece of precision in the combination of materials. Its design takes an irregular form covered with mirrors that are cleverly joined to create an elegant composition.

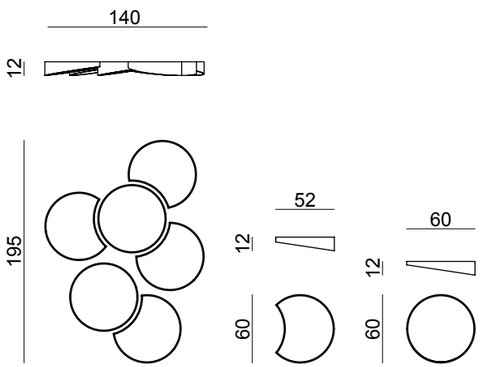

Echo

Floating wall mirror

Design by LATOxLATO

Named after the nymph, Echo Mirror is a resonance of Italian luxury and love for details. It is the perfect commistion of a sharp, clean concept, rounded by an organic, sanded silhouette.

Like a river stone smoothed by the currents, Echo Mirror shines of a natural, old brass texture.

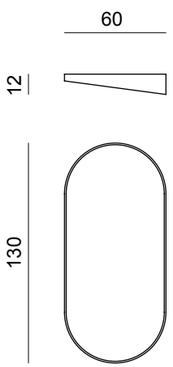

Datasheet

Tables & Console

Tholos

	codes	materials	dimensions
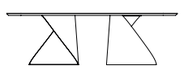	ETH001 ETH002 ETH004	Top: Wood/Glass/Gres Base: Metal	W.210 x D.105/120 x H.78 cm W.240 x D.105/120 x H.78 cm W.300 x D.105/120 x H.78 cm
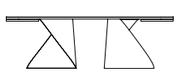	ETH005 ETH006	Top: Gres Base: Metal	W.180 x D.105 x H.78 cm +2 extensions of 40 or 50 cm W.200 x D.120 x H.78 cm +2 extensions of 40 or 50 cm
	ETH007	Top: Wood/Glass/Gres Base: Metal	W.240 x D.120 x H.78 cm
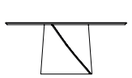	ETH003	Top: Wood/Glass/Gres Base: Metal	ø160 x H.78 cm
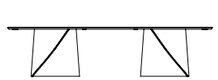	ETH008	Top: Wood/Gres Base: Metal	W.400 x D.120 x H.78 cm
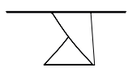	ETH020 ETH021	Top: Wood/Glass/Ceramic/Marble Legs: Metal	W.160 x D35/68 x H.78 cm W.150 x D35/68 x H.78 cm

Torii

	codes	materials	dimensions
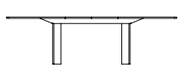	ETO002 ETO003	Top: Wood+Metal Legs: Wood+Metal	W.260/180 x D.110 x H.75 cm W.180/110 x D.110 x H.75 cm
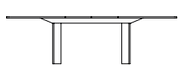	ETO022	Top: Gres+Metal Legs: Wood+Metal	W.200 x D.100 x H.75 cm +2 extensions of 50 cm
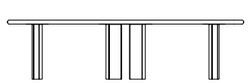	ETO032	Top: Wood+Metal Legs: Wood+Metal	W.300 x D.120 x H.75 cm
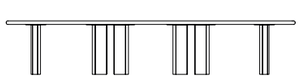	ETO033	Top: Wood+Metal Legs: Wood+Metal	W.400 x D.130 x H.75 cm
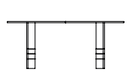	ETO301	Top: Wood+Metal Legs: Wood+Metal	W.150 x D.40 x H.78 cm

Horus

	codes	materials	dimensions
	EHO001	Top: Wood/Gres+Metal Legs: Wood+Metal	W.240 x D.120 x H.75 cm

Dobos

	codes	materials	dimensions
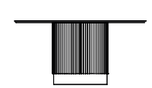	EDO003 EDO004	Top: Wood/Glass/Gres Base: Wood-Metal	ø160 x H.75 cm ø120 x H.75 cm
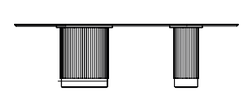	EDO002	Top: Wood/Glass/Gres Base: Wood-Metal	W.240 x D.110 x H.75 cm
	EDO020 EDO021 EDO022	Top: Wood+Metal Legs: Wood+Metal	W.140 x D.45 x H.80 cm W.160 x D.45 x H.80 cm W.180 x D.45 x H.80 cm

Sideboard & Cupboards

Dobos

	codes	materials	dimensions
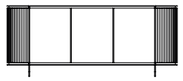	EDO001	Wood+Metal	W.180 x D.45 x H.75 cm
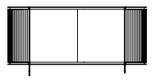	EDO007	Wood+Metal	W.150 x D.45 x H.75 cm
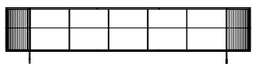	EDO008	Wood+Metal	W.240 x D.45 x H.55 cm
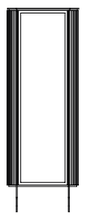	EDO010	Top: Wood//Glass Legs: Metal	W.70 x D.45 x H.200 cm
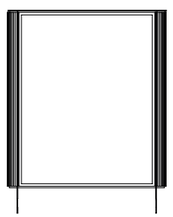	EDO011	Top: Wood//Glass Legs: Metal	W.150 x D.45 x H.200 cm

Focus

	codes	materials	dimensions
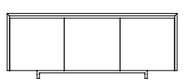	EFO001	Wood+Metal	W.220 x D.50 x H.83 cm

Chairs & Armchairs

Armonia

	codes	materials	dimensions
	EAR001	Upholstered fabric/Leather Legs and structure: Wood	W.54 x D.54 x H.83 cm

Aurora

	codes	materials	dimensions
	EAV001	Upholstered fabric/Leather Legs: Wood	W.60 x D.62 x H.89 cm

Bonnet

	codes	materials	dimensions
	EBO001	Seat: Upholstered fabric Legs: Wood	W.55 x D.63 x H.85 cm

Dolcevita

	codes	materials	dimensions
	EDV001	Upholstered fabric/Leather Legs and structure: Wood	W.56 x D.52 x H.75 cm

Rose Chair

	codes	materials	dimensions
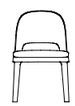	ERE001	Seat: Upholstered fabric Legs: Wood	W.50 x D.55 x H.83 cm

Chairs & Armchairs

B-Chair

codes	materials	dimensions
EBC001	Seat: Upholstered fabric Legs: Metal	W.61 x D.62 x H.80 cm

C-Chair

codes	materials	dimensions
ECC001	Seat: Upholstered fabric Legs: Metal	W.61 x D.62 x H.69 cm

T-Chair

codes	materials	dimensions
ETC001	Seat: Upholstered fabric Legs: Metal	W.67 x D.61 x H.86 cm

Torii

codes	materials	dimensions
ET0004	Wood+Fabric	W.50 x D.55 x H.83 cm

Coffee tables & Benches

Micelio

codes	materials	dimensions
EMC001	Top: Wood+leather Base: Wood	W.140 x D.120 x H.38 cm

codes	materials	dimensions
EMC002	Top: Wood+leather Base: Wood	W.80 x D.80 x H.53 cm

Osiris

codes	materials	dimensions
EOS301	Top: Glass/Gres Base: Metal	W.140 x D.68 x H.30 cm

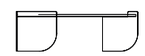

codes	materials	dimensions
EOS302 EOS304	Top: Glass/Gres Base: Metal	W.120 x D.118 x H.40 cm W.80 x D.78 x H.40 cm

codes	materials	dimensions
EOS303	Top: Glass/Gres Base: Metal	W.42 x D.40 x H.55 cm

Torii

codes	materials	dimensions
ETO041	Top: Wood+Gres Base: Wood+Metal	W.60 x D.60 x H.52 cm

codes	materials	dimensions
ETO042	Top: Wood+Gres Base: Wood+Metal	W.80 x D.80 x H47cm

codes	materials	dimensions
ETO043	Top: Wood+Gres Base: Wood+Metal	W.50 x D.40 x H.40 cm

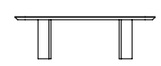

codes	materials	dimensions
ETO044	Top: Wood+Gres Base: Wood+Metal	W.140 x D.70 x H.42 cm

Coffee tables & Benches

Tholos

	codes	materials	dimensions
	ETH301	Top: Wood/Glass/Gres Base: Metal	ø65 x H.62 cm
	ETH302	Top: Wood/Glass/Gres Base: Metal	ø120 x H.37 cm
	ETH303	Top: Wood/Glass/Gres Base: Metal	W.140 x D.90 x H.22 cm

Dobos

	codes	materials	dimensions
	EDO102	Wood+Metal	W.60 x D.40 x H.50,5 cm

Torii

	codes	materials	dimensions
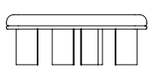	ETO040	Top: Wood+Fabric Legs: Wood+Metal	W.130 x D40 x H.45 cm

Sofas & Armchairs

Michelia

	codes	materials	dimensions
	EMI001	Seat: Upholstered fabric Legs: Wood	W.85 x D.81 x H.73 cm
	EMI002	Seat: Upholstered fabric Legs: Wood	W.100 x D.86 x H.90 cm
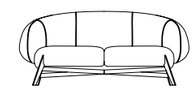	EMI003	Seat: Upholstered fabric Legs: Wood	W.185 x D.86 x H.73 cm

Stone

	codes	materials	dimensions
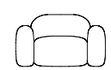	EST001	Seat: Upholstered fabric	W.130 x D.120 x H.80 cm
	EST002	Seat: Upholstered fabric	W.205 x D.120 x H.80 cm
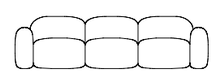	EST003	Seat: Upholstered fabric	W.295 x D.120 x H.80 cm

Eclipse

	codes	materials	dimensions
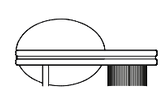	EEC001	Seat: Upholstered fabric Base: Wood+Metal	W.190 x D.97 x H.97 cm

Paschalia

	codes	materials	dimensions
	EPA001	Backrest and seat: Wood/Fabric Base: Wood-Leather	W.85 x D.82 x H.75 cm

Sofas & Armchairs

Matisse

	codes	materials	dimensions
	EMA001	Seat: Upholstered fabric Base: Wood	W.71 x D.70 x H.80 cm
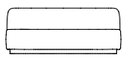	EMA101	Seat: Upholstered fabric Base: Wood	W.160 x D.77 x H.76 cm
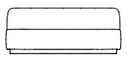	EMA103	Seat: Upholstered fabric Base: Wood	W.220 x D.77 x H.76 cm
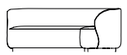	EMA106	Seat: Upholstered fabric Base: Wood with metal finish	W.205 x D.180 x H.76 cm
	EMA202	Seat: Upholstered fabric Base: Wood	ø56 x H.45 cm
	EMA105	Seat: Upholstered fabric Base: Wood	ø50 x H.42 cm

Nest

	codes	materials	dimensions
	ENE001	Seat: Upholstered fabric Base: Wood	W.215 x D.105 x H.100 cm
	ENE002 ENE005	Seat: Upholstered fabric Base: Wood	W.105 x D.105 x H.100 cm W.70 x D.70 x H.100 cm
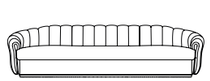	ENE003 ENE004	Seat: Upholstered fabric Base: Wood	W.405 x D.105 x H.100 cm W.300 x D.105 x H.100 cm

Beds

Concept 01

	codes	materials	dimensions
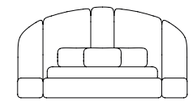	ECO001	Upholstered fabric	W.300 x D.300 x H.155 cm
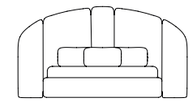	ECO001A	Upholstered fabric	W.300 x D.255 x H.155 cm
	ECO001B Top ECO001B	Upholstered fabric Wood panel	W.45 x D.54 x H.35 cm
	ECO001C	Upholstered fabric	W.45 x D.210 x H.35 cm
	ECO001D ECO001E	Upholstered fabric	W.45 x D.210 x H.35 cm

Sophisma

	codes	materials	dimensions
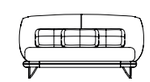	ESO001	Headboard: Upholstered fabric Frame: Wood Legs: Metal	W.220 x D.240 x H.115 cm

Cinnamon

	codes	materials	dimensions
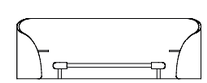	ECN001	Wood+Metal	W.330 x D.215 x H.120 cm
	ECN010	Wood+Metal+Fabric	W.330 x D.215 x H.120 cm
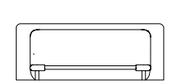	ECN011	Wood+Metal+Fabric	W.215x D.215 x H.120 cm

Beds

Nuvola

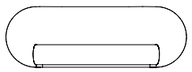

codes	materials	dimensions
ENU001	Upholstered fabric	W.280 x D.230 x H.100 cm

Erythea

codes	materials	dimensions
EER001	Headboard: Upholstered fabric Ring: Upholstered fabric Legs: Metal	W.216 x D.220 x H.120 cm

Nightstands & Dressers

Echo

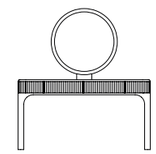

codes	materials	dimensions
ECH101	Wood+Metal	W.130 x D.55 x H.75 cm
ECH104	Wood+Metal	W.52 x D.42 x H.47 cm
ECH102	Wood+Metal+Mirror	W.140 x D.45 x H.150 cm

Dobos

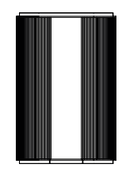

codes	materials	dimensions
EDO101	Wood+Metal	W.60 x D.40 x H.55 cm
EDO201	Wood+Metal	W.120 x D.60 x H.270 cm
EDO202	Wood+Metal	W.180 x D.60 x H.270 cm

Paradigma

codes	materials	dimensions
EPA001	Structure: Wood+Leather	W.50 x D.40 x H.20 cm
EPA002	Structure: Wood+Leather	W.200 x D.40 x H.20 cm

Accessories

Bolla

	codes	materials	dimensions
	EBL001	Mirror+Metal	ø60 x D.12 cm
	EBL002	Mirror+Metal	W.52 x D.12 x H.60 cm
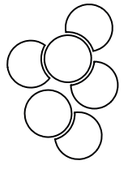	EBL001 + EBL002	Mirror+Metal	W.140 x D.12 x H.195 cm

Echo

	codes	materials	dimensions
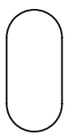	ECH103	Mirror+Metal	W.60 x D.12 x H.130 cm

Gallery

CORIELLO
GROUP

ERCUIS

ENCORE
ITALIA

2026/01

ENCORE ITALIA
Luxury Brand by Linea &Casa+39 srl - Made in Italy
Phone. +39 (0)434624377 | Fax. +39 (0)434607941 | www.encoreitalia.it | info@encoreitalia.it